Piros Laser-Thru-Beam Sensors
LLAB 501.2 (Transmitter)

Piros thru-beam sensor with cooling shell for material monitoring and object detection in steel and rolling mills.

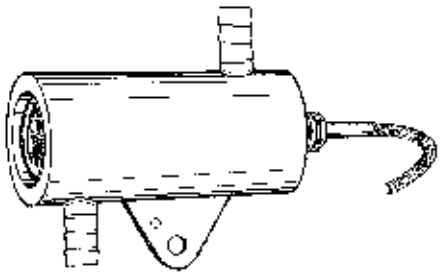

Technical Data

Type	**LLAB 501.2**
Art.-No.	5107A
Function	transmitter
Usable with receiver	LLSB 501.23 G Art.-No. 5106A
Range	50 m max.
Light	Laser, red, 650 nm Protection class 1
Permissible ambient light	5000 lux
Supply voltage	10 – 30 V DC
Ripple voltage	< 15 %
Current absorbed	< 20 mA
Ambient temperature	-10 ... +50°C without cooling
Protection class	IP 67
Connection	2 m POKT-Therm cable
Supply voltage display	LED
Housing	stainless steel with cooling jacket

Diagram of Connections

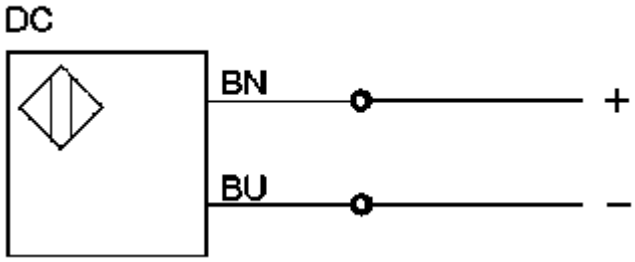

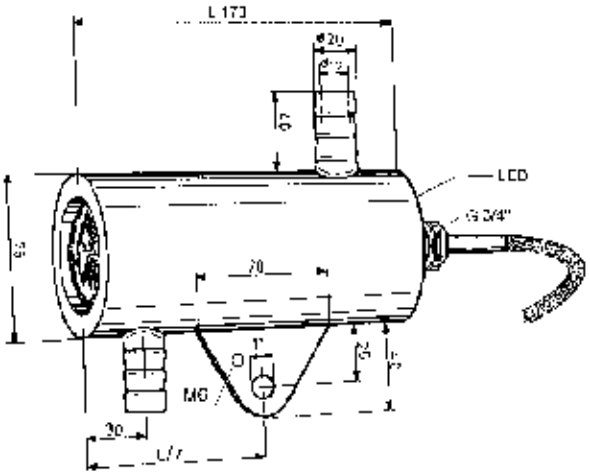

Proxitron GmbH - Gärtnerstr. 10 - D-25335 Elmshorn - Tel. 04121/2621-0 - Fax. 04121/24404 - mail@proxitron.de